All-City Metal, Inc.

956 Brush Hollow Road, Westbury, NY 11590
P: (718) 472-5700 • F: (718)472-5813
www.allcitymetal.com • info@allcitymetal.com

COMMERCIAL KITCHEN EXHAUST SHOP STANDARD SUBMITTAL

ACM JOB#

Proj. Name:	
Location:	
Engineer:	
Architect:	
Contractor:	
Date:	
DWG Date:	
REV. No:	
REV. No:	
Notes:	THIS IS ALL CITY METAL INTERPRETATION OF PROJECT SPECIFICATIONS AND DETAILS. PLEASE NOTE ANY DISCREPANCIES. APPROVAL OF THESE STANDARDS IS AN ACKNOWLEDGEMENT OF AGREEMENT WITHIN.

All-City Metal, Inc.

956 Brush Hollow Road, Westbury, NY 11590
P: (718) 472-5700 • F: (718)472-5813
www.allcitymetal.com • info@allcitymetal.com

Project Specific Notes:

No.	Notes:	Spec Section
1	All ductwork as per SMACNA Standards 4th edition 2020	
2	Commercial Kitchen Hoods: Comply with NFPA96 1. Exposed to View to be Stainless Steel Type 304 2. Concealed to be Carbon-Steel Sheet (Black Iron) 3. Welded Seams & Joints 4. Pressure Class: Positive or Negative 3" wg 5. Airtight/Watertight	
3	NFPA States: 506.3.1 Duct Materials - Ducts servicing Type I hoods shall be constructed of materials in accordance with Sections 506.3.1.1 & 506.3.1.2	
4	Grease Duct Materials – Grease ducts serving Type I hoods and located within buildings shall be constructed as follows: 1. Duct with a cross-sectional area up to and including 155 square inches (1.0 square meters) shall be constructed of 0.0598 inch (1.52 mm) #16ga steel. 2. Ducts with a cross-sectional area over 155 square inches (100 000 mm2) but not more than 200 square inches (0.129 m2) shall be constructed of 0.074 inch (1.9mm) #14ga steel. 3. Duct with a cross-sectional area equal to or more than 200 square inches (0.129 m2) shall be constructed of 0.1046 inch (2.66mmm) #12ga steel.	
5	If stainless steel is used for ducts of any of the cross-sectional areas listed above, the gauge steel may be increased upwards (resulting in a smaller thickness) by 1 even gauge size.	
6	Most common sizes are 20x20 = 400 sq inches = 12ga. carbon steel material and gauge will be used.	
7	506.3.1.2 Makeup Air Ducts - Make up air ducts connecting to or within 18 inches (457 mm) of a Type I hood shall be constructed and installed in accordance with Sections 603.1, 603.3, 603.4, 603.9,603.10 and 603.12. Duct insulation installed within 18 inches (457 mm) of a Type I hood shall be noncombustible or shall be listed for the application.	

All-City Metal, Inc.

956 Brush Hollow Road, Westbury, NY 11590
P: (718) 472-5700 • F: (718)472-5813
www.allcitymetal.com • info@allcitymetal.com

8	Installation: • Install exhaust duct without dips & taps that may hold grease. • Sloped a minimum of 2% to drain grease back to hood. • Install access panel within 10ft of each change of direction (greater than 45*) and at maximum intervals of 20ft in horizontal ducts & at each floor for vertical ducts or as shown on drawings	
9	Clean Outs: • Not be closer than 1” from the edge of the duct. • Have opening dimensions of not less than 12x12. • Where such dimensions preclude installation the opening shall not be less than 12 inches on one side and shall be large enough to provide access for cleaning and maintenance. • Located at grease reservoirs.	

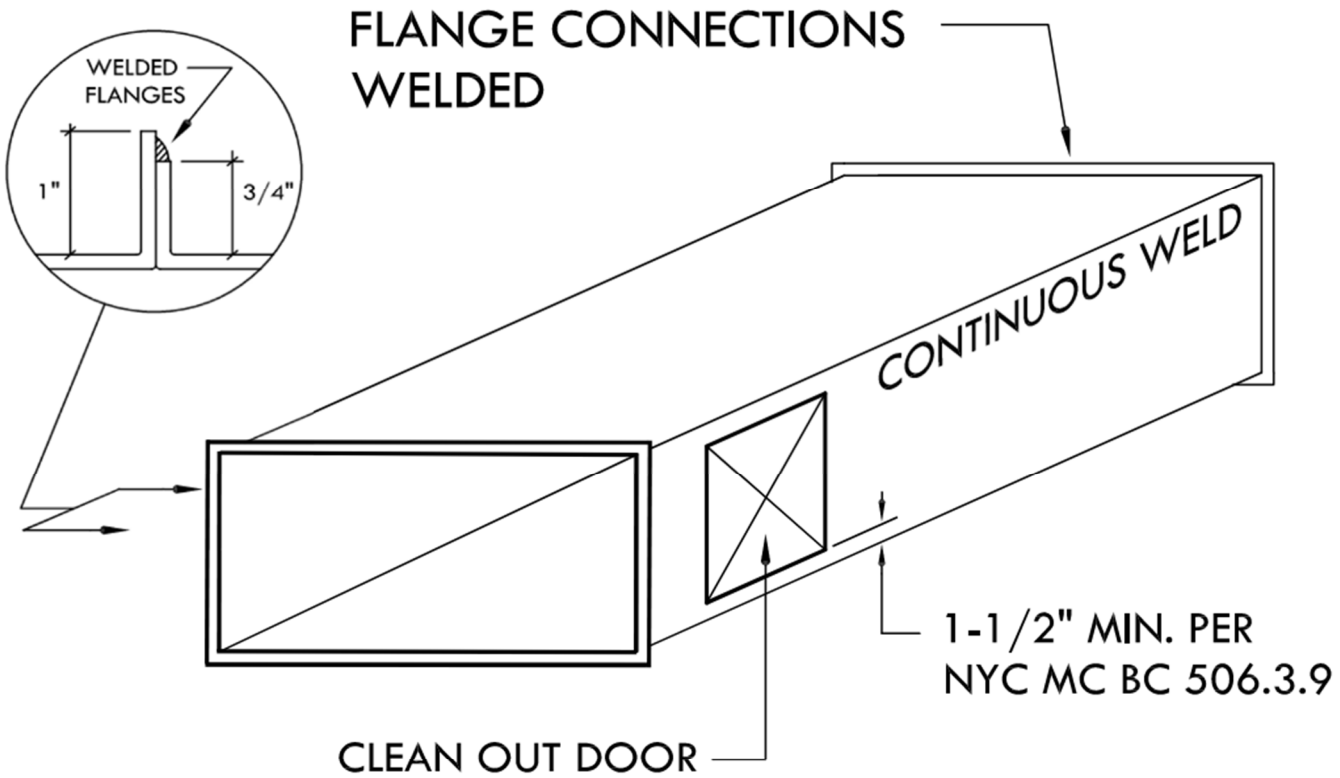

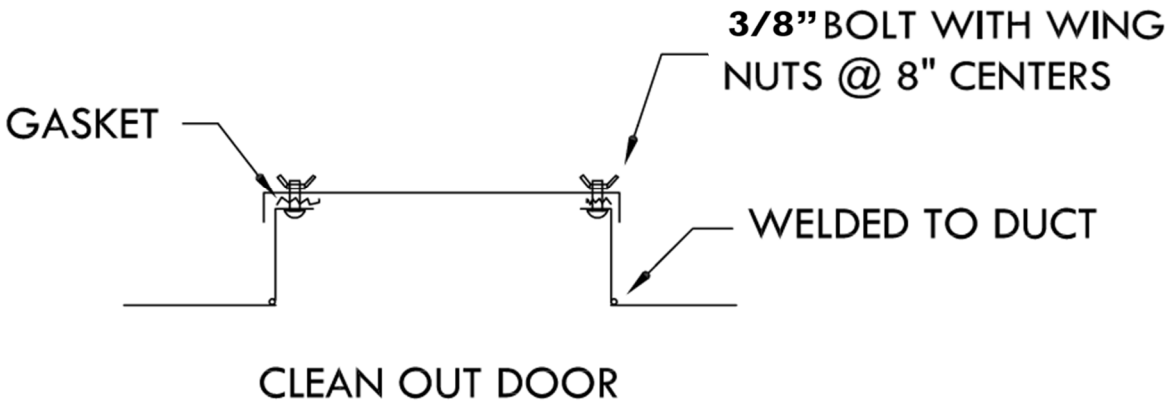

SHEET METAL FABRICATORS: **ALL-CITY METAL, INC** 956 BRUSH HOLLOW ROAD WESTBURY, N.Y. 11590 718-472-5700 FAX 718-472-5813			PROJECT: **SHOP STANDARDS**
DRAWN BY: A.L.	DATE:	SHEET 1 OF 1	TITLE: **KITCHEN EXHAUST DUCTWORK** BLACK IRON — SS-KX-WELD
SCALE:	PROJECT #:		

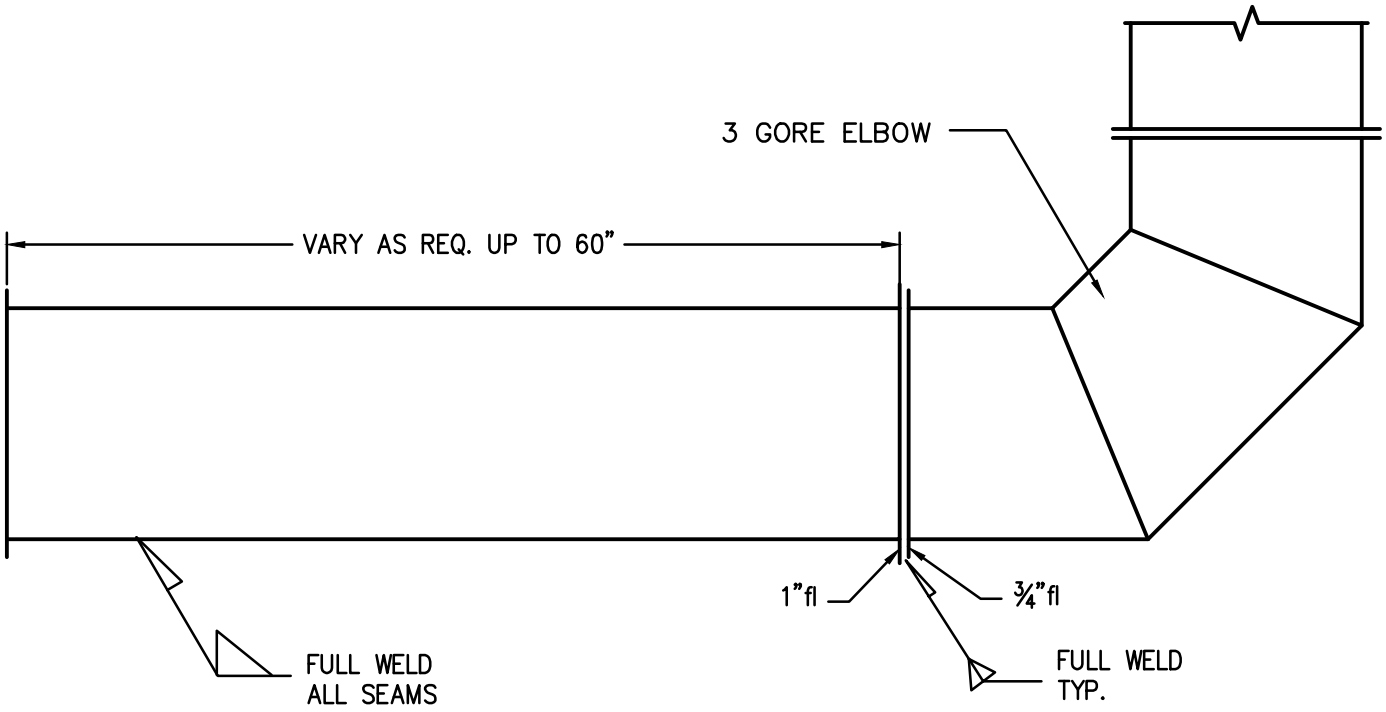

SHEET METAL FABRICATORS:

ALL-CITY METAL, INC
956 BRUSH HOLLOW ROAD
WESTBURY, N.Y. 11590
718-472-5700 FAX 718-472-5813

WELDED RECTANGULAR DUCT CONSTRUCTION

Morgan Advanced Materials

FireMaster® FastWrap® XL

Product Data and Installation Guidelines

Product Description

Thermal Ceramics FireMaster FastWrap XL is a flexible blanket composed of high temperature fibers classified for applications to 2192°F (1200°C) and fully encapsulated in a durable glass fiber reinforced foil facing for easy handling and installation.

Thermal Ceramics FastWrap XL is UL and ULC Listed for 1 and 2 hour fire resistive enclosure protection, zero clearance for kitchen exhaust ducts, electrical circuit protection, and as a component in UL firestop designs for fire resistance rated floors, ceilings, and walls.

The core fibers in FastWrap XL are manufactured using Thermal Ceramics patented Superwool® fiber which is an alkaline-earth silicate wool with low biopersistence and therefore increased safety for installers. FastWrap XL is under UL's Follow-Up Service Program to ensure the consistent quality essential to this life-safety application.

Features or Benefits

- Thin and Lightweight at 1-1/2" (38mm) thick, 6 pcf (96 kg/m^3) density
- Contours easily to complex duct designs
- Grease duct installation UL and ULC Listed with butt joints at all seams on both layers
- Fully foil encapsulated for fast and clean installation
- Contains 2192°F (1200°C) rated fibers
- Microbial Resistance validated by UL Environment
- Good sound absorption
- Compliant to IMC, NFPA 96, UMC, CMC, CNBC

Applications

- 2 hour enclosure and firestop system for kitchen exhaust duct
- Zero clearance to combustibles
- 1, 2 and 3 hour enclosure and firestop system for hazardous exhaust ducts, pressurization ducts, clothes dryer exhaust ducts, trash and linen chutes, and other fire rated HVAC ducts
- 1 hour electrical circuit integrity protection
- Engineered and tested solutions for fire protection of structural steel and storage vessels per ASTM E119, ISO 834, and UL1709

FIREMASTER®

www.morganthermalceramics.com
Email: marketing.tc@morganplc.com
Thermal Ceramics is a business of Morgan Advanced Materials

FireMaster® FastWrap® XL

Product Data and Installation Guidelines

Specifications - Division 23 07 00 (or 15080)

CSI Spec and AutoCAD available online, www.arcat.com/sd/clients/thermcer.html.

Thermal Ceramics FireMaster FastWrap XL is a flexible high temperature insulation rated to 2192°F (1200°C) that is fully encapsulated in FSP facing. The duct enclosure system shall be listed by UL and /or ULC per ASTM E 2336, CAN/ULC S144 and ISO 6944 for 1-, 2- and 3-hour rating and zero clearance to combustibles, and tested per ASTM E84 for a flame/smoke rating less than 25/50. Insulation shall have a nominal thickness of 1-1/2 inches (38 mm) and density of 6 pcf (96 kg/m^3). Insulation shall have an R-Value of 7.3 at 75°F. Installation shall be in strict accordance to manufacturers published installation instructions, UL or ULC Listings, and shop drawings.

Physical Properties

Product	Unit	Size	Units/	Weight/
FastWrap XL	Roll	1.5in x 24in x 25ft	1	37.5
		1.5in x 48in x 25ft	1	75

Listing and Code Reports

Listed Uses	Agency	Listing	Layers
Grease Duct Enclosure per ASTM E2336 and AC101 (2012, 2015 IMC, NFPA 96, UMC, CMC)	UL	G18	2
	UL	ESR 2213 ER14229-01	
ULC Grease Duct Test Protocol and CAN/ ULC S144*	ULC	FRD 4, 7*	2
Through Penetration FireStop System per ASTM E814, UL 1479	UL	See Figure 2	1 or 2
	ULC		
1- or 2-hour Ventilation Duct Enclosure per ISO 6944	UL	HNLJ.V1, 19, 29	1
	ULC	FRD 3, 5, 6, 18	
3-hour Ventilation Duct Enclosure per ISO 6944	UL	HNLJ.V2	2
Electrical Circuit Protective System	UL	FHIT.5	2

Performance Specifications

Reference Standard	Standard No.	Performance
Grease Duct Enclosure System	ASTM E2336	Pass
Section 16.1 - Non-Combustibility	ASTM E136	Pass
Section 16.2-Fire Resistance (wall)	ASTM E119	Pass
Section 16.3 - Durability Test	ASTM C518	Pass
Section 16.4 - Internal Fire Test	ASTM E2336	Pass
Section 16.5 - Fire Engulfment (duct)	ASTM E814/ E119	Pass
ULC Grease Duct Test Protocol		Pass
Standard Methods of Fire Resistance Tests - Grease Duct As-semblies	CAN/ULC S144	Pass
Grease Duct Clearances	UL 1978	Pass
Air Ventilation Duct Enclosure	ISO 6944	Pass
Surface Burning Characteristics	ASTM E84	<25/50
Thermal Resistance, R-value @ 75°F	ASTM C518	7.3 per layer
Mold Growth	ASTM C1338	ULE Validated
Low VOCs	CA Standard 01350	ULE Validated

Storage

Thermal Ceramics FastWrap XL must be stored in a dry warehouse environment on pallets. Pallets should not be stacked.

Whilst the values and application information in this datasheet are typical, they are given for guidance only. The values and the information given are subject to normal manufacturing variation and may be subject to change without notice. Morgan Advanced Materials – Thermal Ceramics makes no guarantees and gives no warranties about the suitability of a product and you should seek advice to confirm the product's suitability for use with Morgan Advanced Materials - Thermal Ceramics.

www.morganthermalceramics.com
Email: marketing.tc@morganplc.com
Thermal Ceramics is a business of Morgan Advanced Materials

Installation

FireMaster FastWrap XL shall be installed by a qualified contractor in accordance with manufacturer's instructions and laboratory design listings.

Materials and Equipment

- FireMaster FastWrap XL blanket
- Aluminum foil tape
- Glass filament reinforced tape (optional)
- Carbon steel or stainless steel banding material,
- Minimum 1/2" (13mm) wide, minimum 0.015" (0.4mm) thick, with steel banding clips
- Hand banding tensioner and crimping tool
- Minimum 12 gage (3mm) steel insulation pins; steel speed clips, minimum 1-1/2" (38mm) square or 1-1/2" (38mm) diameter, or equivalent sized cup-head pins
- Capacitor discharge stud gun
- Approved firestop sealant

General

Cut edges of the blanket shall be taped with aluminum foil tape to prevent exposed edges of the insulation absorbing grease and moisture in the event of a compromised grease duct joint or condensation. Overlaps and/or tightly butted joints are used to block heat transfer in the event of duct deformation resulting from thermal expansion. Filament tape is suggested to hold the blanket in place until steel banding or pinning is installed to permanently secure the blanket.

A. Installation on Grease Duct per ASTM E2336 and CAN/ULC S144 (Figure 1)

System requires two layers of insulation applied directly to the duct with tight butt joints at all seams on both layers. The first layer of insulation is cut to a length sufficient to wrap around the duct and provide a tight butt joint where the blanket ends meet. Adjacent blankets on the first layer are butted tightly together with longitudinal seams offset minimum 6" (150mm). The second layer of insulation is installed in the same method as the first layer, with seams between layers offset a minimum of 6" (150mm). Banding and/or pinning per Section D is used to permanently secure the insulation to the duct.

B. Installation on HVAC Duct per ISO 6944 (Figure 1)

System requires one layer of insulation applied directly to the duct with 3" (75mm) overlaps at all seams. The insulation is cut to a length sufficient to wrap around the duct and provide a 3" (75mm) overlap where the blanket ends meet. Adjacent blankets are installed to provide a minimum overlap of 3" (75mm). Banding and/or pinning per Section D is used to permanently secure the insulation to the duct.

C. 2 & 3 Sided Wrap Installation (Figure 4)

When space does not allow for a complete wrap applied to the duct on all four sides, the FastWrap XL is approved for 2 or 3 sided installations with mechanical attachment to a rated concrete or CMU assembly. (See Figure 4 for installation details.)

D. Mechanical Attachment Methods

1) Banding (Figure 1) - Minimum 1/2" wide x 0.015" thick (13mm x 0.4mm) carbon steel or stainless steel banding is placed around the entire perimeter of the insulated duct on maximum 10-1/2" (270mm) centers and 1-1/2" (38mm) from each blanket edge or 1-1/2" (38mm) from each collar edge when using the butt joint and collar method. The banding is placed around the blanket and tightened to firmly hold the FastWrap XL in place against the duct, but not cause any cutting or damage to the blanket.

2) Pinning - Pinning on all sides of the duct may be used as an alternative to banding. For ducts wider than 24" (610mm) pinning is required on the bottom of horizontal runs, or on one side of vertical runs (in addition to steel banding). When applicable, 12 Gage (0.4mm) steel pins are installed on 12" (305mm) centers along the width of the duct and 10-1/2" (270mm) centers along the length of the duct. Pins that extend beyond the outer blanket layer shall be turned down or the excessive length cut off to prevent sharp edges. Shoot through pins (cup head pins) may be used in conjunction with steel banding to prevent blanket sag.

Whilst the values and application information in this datasheet are typical, they are given for guidance only. The values and the information given are subject to normal manufacturing variation and may be subject to change without notice. Morgan Advanced Materials – Thermal Ceramics makes no guarantees and gives no warranties about the suitability of a product and you should seek advice to confirm the product's suitability for use with Morgan Advanced Materials - Thermal Ceramics.

E. Access Doors

Field Fabricated Access Doors - Each access door assembly has four threaded rods 1/4 inch (6mm) in diameter and 5” (127mm) in length, with one welded to each corner of the door opening. Hollow steel tubes, 4-1/2” (114mm) long are installed outside the access cover plate and over the threaded rods. Four 12 gage (3mm) and 4-1/2” (114mm) long steel insulation pins are welded to the access cover plate to allow for installation of the three layers of FastWrap XL. One layer of FastWrap XL is cut to approximately the same size as the access panel, and impaled over the insulation pins on the panel. A second layer of FastWrap XL is cut so as to overlap the first layer a minimum of 1-1/2” (38mm). It is essential that the first and second layer fit tightly against the surrounding wrap with no through openings. The third and outside layer should be cut to overlap the second insulation layer by a minimum of 1-1/2” (38mm). Minimum 1-1/2” (38mm) round or square insulation clips are installed on the insulation pins to secure the three layers of insulation to the access cover plate. All cut edges of the insulation shall be taped with minimum 3” (75mm) wide aluminum foil tape. Wing nuts and washers are installed on the four threaded rods, and tightened against the hollow steel tubes to seal the access cover plate to the duct.

F. Through Penetration Firestop assembly (Figure 2)

When the duct penetrates a fire rated assembly an approved fire stop system must be employed. Figure 2 provides a list of some of the UL/ULC firestop design listings which can be found in the Certifications Directory at www.ul.com for US systems and www.ulc.ca for Canadian systems. Prior to installing any firestop system the surfaces of all openings and penetrating items must be clean and dry. The FastWrap XL core blanket (or mineral wool where allowed by the firestop design listing) must be compressed into the annular space. The packing material must be recessed a minimum depth from the surface of the concrete or gypsum assembly. The recessed opening must be filled with a minimum thickness of an approved firestop sealant. The packing material type and compression, minimum recess (typically 1/4” (6mm)), and approved firestop sealant and thickness (typically 1/4” (6mm)) shall be as specified in an approved UL / ULC firestop design listing. When there is not sufficient annular space around the duct to run the FastWrap XL enclosure system continuous through the fire rated assembly, the enclosure may terminate above and below the floor/ceiling assembly or on either side of a wall assembly as shown in Figure 2. When this method is used, the FastWrap XL must be mechanically attached on either side of the fire rated assembly using one of the attachment methods described in Section D, spaced a maximum of 1-1/2” (38mm) from the fire rated assembly.

G. Support Hanger Systems

1) Grease ducts: Trapeze support hangers shall be spaced on maximum 60 in. (1500 mm) centers. Hanger rods or straps shall be anchored with steel drop in or wedge expansion type masonry anchors. No additional protection is required for hangers and supports meeting the requirements of the Table below.

Hanger Cross Section	Maximum Perimeter, in (mm)	Trapeze Support (or equivalent Yield Strength)
3⁄8 in (10 mm) threaded rod	148 in (3759mm)	2 in x 2 in x 1⁄8 in angle (51mm x 51mm x 3mm)
	144 in (3660mm)	2 in x 2 in x 1/4in angle (51mm x 51mm x 6mm)

2) HVAC ducts: Trapeze support hangers shall be spaced on maximum 60 in. (1500 mm) centers. Hanger rods or straps shall be anchored with steel drop in or wedge expansion type masonry anchors. No additional protection is required for hangers and supports meeting the requirements of the Table below.

Hanger Cross Section	Max. Perimeter, in (mm)	Trapeze Support (or equivalent Yield Strength)
1in x 16 gage strap (25mm x 1.5 gage strap)	100 (2540)	
1⁄4in (6mm) threaded rod	50 (1270)	1-1⁄2 in x 1-1⁄2 in x 3⁄16in angle (38mm x 38mm x 5mm)
3⁄8in (10mm) threaded rod	150 (3810)	1-1⁄2 in x 1-1⁄2 in x 3⁄16in angle (38mm x 38mm x 5mm)
1⁄2in (12.7mm) threaded rod	218 (5540)	2 in x 2 in x 1⁄4 in angle (51mm x 51mm x 6mm)

Whilst the values and application information in this datasheet are typical, they are given for guidance only. The values and the information given are subject to normal manufacturing variation and may be subject to change without notice. Morgan Advanced Materials – Thermal Ceramics makes no guarantees and gives no warranties about the suitability of a product and you should seek advice to confirm the product’s suitability for use with Morgan Advanced Materials - Thermal Ceramics.

www.morganthermalceramics.com
Email: marketing.tc@morganplc.com
Thermal Ceramics is a business of Morgan Advanced Materials

Maintenance and Repair

No maintenance is required when installed in accordance with Thermal Ceramics installation instructions. If damage is limited to the foil facing, aluminum foil tape can be used to repair the foil facing. If an area of blanket is found to be damaged, the following procedure must be incorporated. If the damaged area is larger than 8” (203mm) x 8” (203mm) the entire wrap section must be removed and replaced according to Thermal Ceramics installation instructions. If the damaged area is small (less than 8” (203mm) x 8” (203mm)), the damaged area must be cut away and replaced with a new section 1” (25mm) larger in length and width than the cut out, such that the new section can be compressed tightly into the cut-out area. All cut edges of the new section must be taped and sealed with aluminum foil tape. The new section must be held in place with either pinning or banding per Thermal Ceramics installation instructions.

10. Limitations

FireMaster FastWrap XL shall be installed in accordance with these installation instructions and appropriate laboratory design listings. The integrity of FastWrap XL systems is limited to the quality of the installation.

** For personal protective equipment recommendations, please see SDS.*

Thermal Ceramics, FireMaster, and FastWrap are trademarks of Morgan Advanced Materials. FireMaster products are manufactured by Thermal Ceramics and are distributed by authorised distributors.

Whilst the values and application information in this datasheet are typical, they are given for guidance only. The values and the information given are subject to normal manufacturing variation and may be subject to change without notice. Morgan Advanced Materials – Thermal Ceramics makes no guarantees and gives no warranties about the suitability of a product and you should seek advice to confirm the product’s suitability for use with Morgan Advanced Materials - Thermal Ceramics.

www.morganthermalceramics.com
Email: marketing.tc@morganplc.com
Thermal Ceramics is a business of Morgan Advanced Materials

Figure 1

Grease and HVAC Duct Enclosure System
1 or 2 Hour Shaft Alternative / Zero Clearance to Combustibles

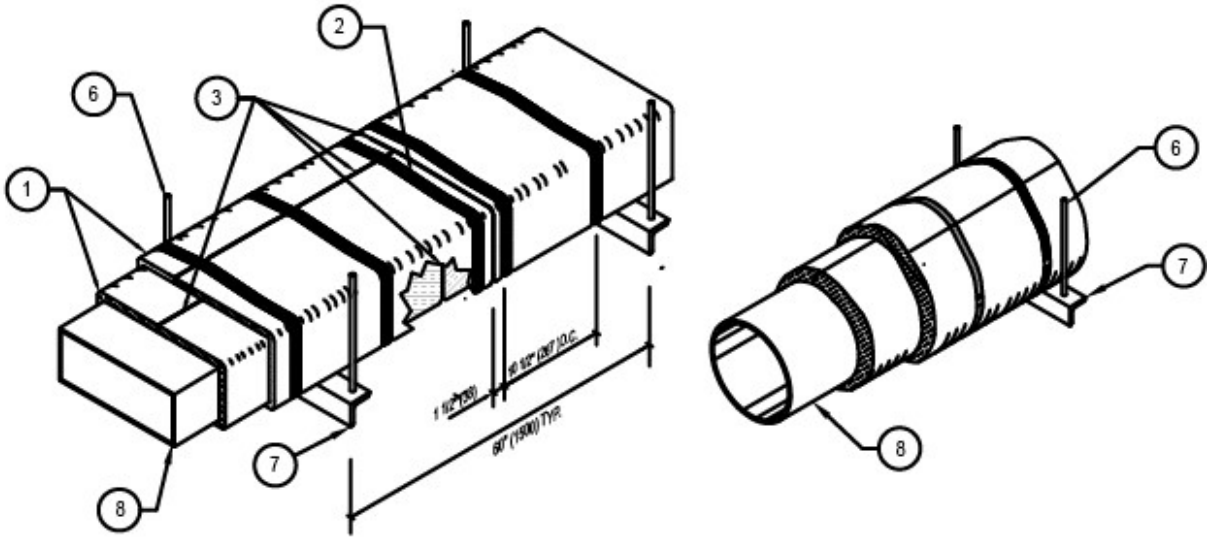

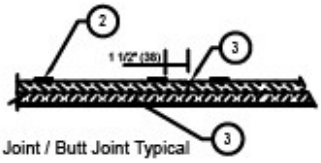

Butt Joint / Butt Joint Typical

TWO LAYER INSTALLATION (Grease Duct per ASTM E2336 and CAN/ULC S144)

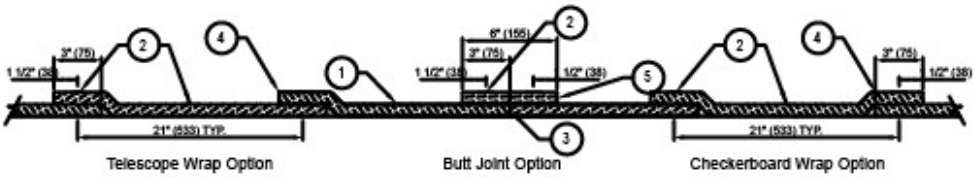

Telescope Wrap Option | Butt Joint Option | Checkerboard Wrap Option

SINGLE LAYER INSTALLATION OPTIONS (2-Hour rated HVAC Duct per UL HNLJ V-19)

LEGEND	
1	Two Layers of XL Insulation for ASTM E2336 and CAN/ULC S144 Grease Duct Enclosures One Layer of XL Insulation for 2-Hour Air Ventilation Duct Enclosures
2	Steel banding minimum 1/2" (13) wide by 0.015" (0.4) thick.
3	Tight butt joints (no overlap) at perimeter and longitudinal joints, both layers for grease ducts
4	Min. 3" (75) overlap on perimeter and between adjacent blankets
5	Optional 6" XL collar
6	Hangers - size dependent weight of assembly (see datasheet Section G)
7	Trapeze Supports - size dependent on weight of assembly (see datasheet Section G)
8	Steel Rectangular or Round Duct (size, gage and construction dependent per Listed Design)

The integrity of Morgan Thermal Ceramics duct systems is limited to the quality of the installation.

XL001-10

FIREMASTER®

Whilst the values and application information in this datasheet are typical, they are given for guidance only. The values and the information given are subject to normal manufacturing variation and may be subject to change without notice. Morgan Advanced Materials – Thermal Ceramics makes no guarantees and gives no warranties about the suitability of a product and you should seek advice to confirm the product's suitability for use with Morgan Advanced Materials - Thermal Ceramics.

Figure 2

Commercial Kitchen Grease Duct Enclosure System
Air Ventilation Duct Enclosure System
Through Penetration Firestop Systems

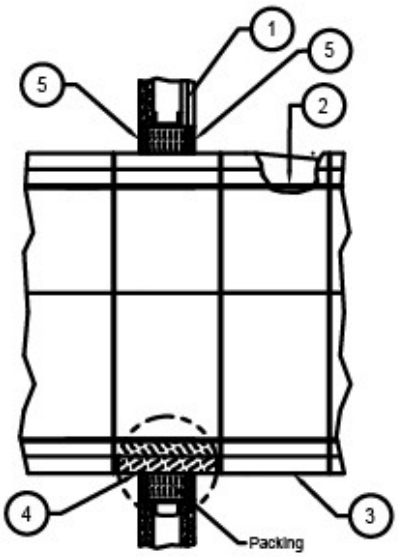

XL Insulation continuous through rated wall assembly

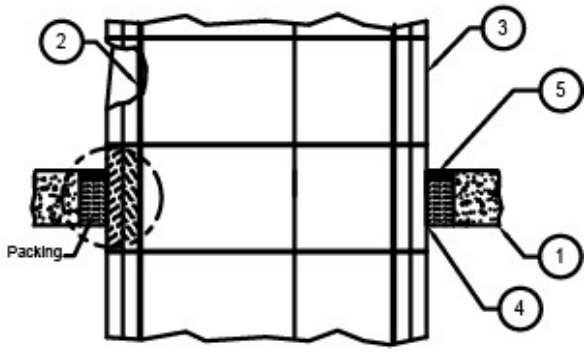

XL Insulation continuous through rated floor/ceiling assembly

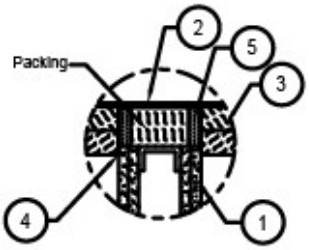

XL insulation terminated on both sides of the rated wall assembly

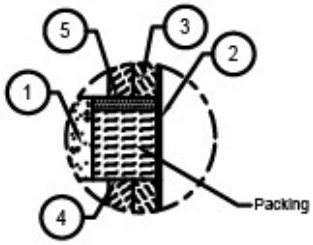

XL insulation terminated at the top and bottom surface of the floor/ceiling assembly

Firestop Designs per ASTM E814 / UL 1479 - Consult UL / ULC Directories for System Details						
UL Listing	F- & T-Rating	(1) Floor/Wall	(2) Penetrant	(3) Enclosure Per	(4) Termination	(5) Firestop Sealant Details
C-AJ-7012	2-hour	Concrete/CMU	84x24; 26 Ga Duct	V19; FRD3; 5; 18	wrap through	1/2 in; STI; Tremco
C-AJ-7014	3-hour	Concrete/CMU	84x24; 26 Ga Duct	V2;	wrap through	1/2 in; STI; Tremco
C-AJ-7019	1 or 2-hour	Concrete/CMU	84x24; 26 Ga Duct	V19; FRD3, 5, 18	terminate at	1/4 in; STI; Tremco
C-AJ-7021	2-hour	Concrete/CMU	49x24; 16 Ga Duct	G18; FRD4; 7	terminate at	1/4 in; STI; Tremco
C-AJ-7095	2-hour	Concrete/CMU	39x39; 22 Ga Duct	V19; FRD3, 5, 18	wrap through	1/4 in; STI Hilti; Rectorseal; Tremco
C-AJ-7098	2-hour	Concrete/CMU	49x24; 16 Ga Duct	G18; FRD4; 7	wrap through	1/4 in; STI; Hilti; Rectorseal; Tremco
F-C-7036	1 or 2-hour	Wood/Gyp Floor	24x12; 16 Ga Duct	G18; FRD4; 7	wrap through	1/4 in; STI; Hilti; Rectorseal; Tremco
F-C-7055	1-hour	Wood/Gyp Floor	4 Dia; 30 Ga Duct	V29; FRD28	wrap through	1/4 in; STI
W-J-7086	2-hour	Concrete/CMU Wall	100x100; 26 Ga Duct	V19; FRD3;5; 18	terminate at	1/4 in; STI
W-L-7121	1 or 2-hour	Gyp Wall	30x30; 16 Ga Duct	G18; FRD4; 7	wrap through	1/4 in; STI; Hilti; Rectorseal; Tremco
W-L-7145	1 or 2-hour	Gyp Wall	100x100; 26 Ga Duct	V19; FRD3; 5; 18	terminate at	5/8 in; STI

The integrity of Morgan Thermal Ceramics duct systems is limited to the quality of the installation.
XL003-5

Whilst the values and application information in this datasheet are typical, they are given for guidance only. The values and the information given are subject to normal manufacturing variation and may be subject to change without notice. Morgan Advanced Materials – Thermal Ceramics makes no guarantees and gives no warranties about the suitability of a product and you should seek advice to confirm the product's suitability for use with Morgan Advanced Materials - Thermal Ceramics.

Figure 3

Commercial Kitchen Grease Duct Enclosure System
Air Ventilation Duct Enclosure System
1 Or 2 Hour Shaft Alternative / Zero Clearance to Combustibles
2 and 3 Sided Wrap Detail for Attaching to Walls and/or Ceilings

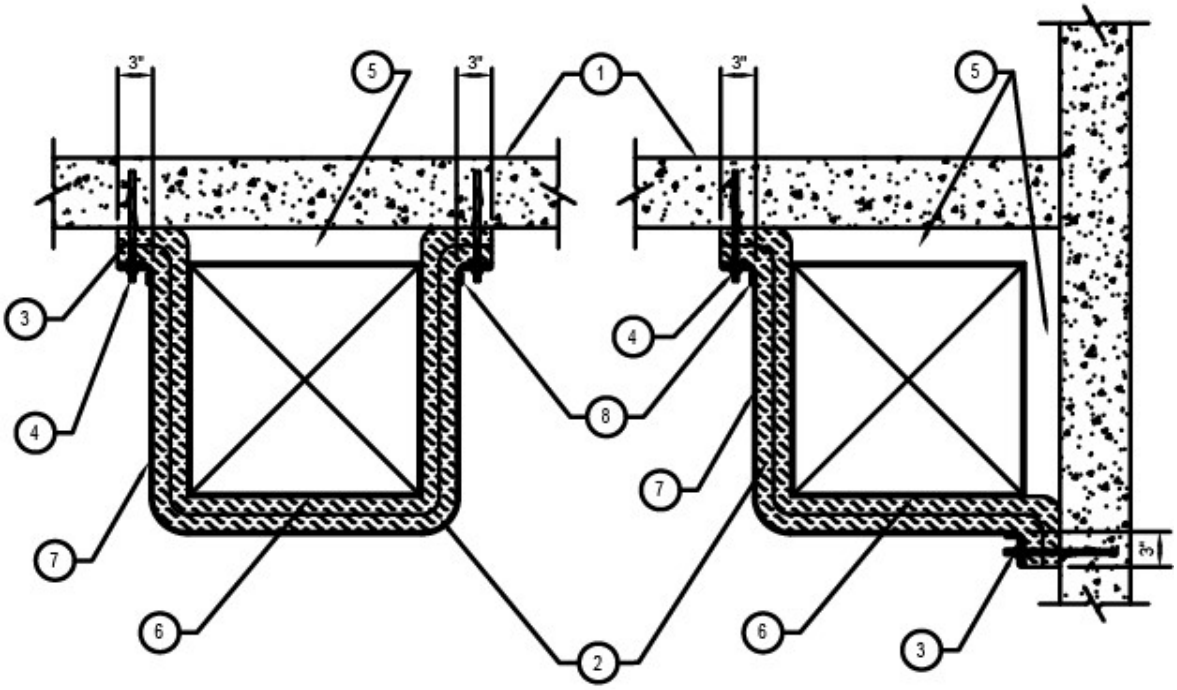

Note: Ducts must be independently supported per code

LEGEND	
1	1 or 2 Hour Rated Concrete floor, ceiling, or wall
2	Two layers of XL Insulation for Grease Duct Enclosures (install per UL G18) One layer of XL Insulation for Air Ventilation Duct Enclosures (install per UL V19) Two layers of XL Insulation for 3-h Air Ventilation Duct Enclosure (install per UL V2)
3	Concrete fastener system
4	3/16" (5) thick x 2" (50) -3" (75) wide bar stock perforated 12" (305) o.c.
5	8" (203) maximum Air Gap
6	Duct
7	Steel banding min. 1/2" (13) wide by 0.015" (0.4) thick.
8	Banding clip

The integrity of Morgan Thermal Ceramics duct systems is limited to the quality of the installation.

XL005-4

Whilst the values and application information in this datasheet are typical, they are given for guidance only. The values and the information given are subject to normal manufacturing variation and may be subject to change without notice. Morgan Advanced Materials – Thermal Ceramics makes no guarantees and gives no warranties about the suitability of a product and you should seek advice to confirm the product's suitability for use with Morgan Advanced Materials - Thermal Ceramics.

Fire Protection Products

3M™ Fire Barrier Duct Wrap 615+

Technical Data Sheet | February / 2021

Product Description

3M™ Fire Barrier Duct Wrap 615+ is a flexible fire-resistant wrap consisting of an inorganic fiber blanket encapsulated with a scrim-reinforced foil. The product is 1-1/2 in. thick, 6pcf density[1]. It is used to fire rate commercial kitchen grease ducts as well as ventilation ducts. 3M™ Fire Barrier Duct Wrap 615+ is a proven alternative to 1- or 2-hour fire-resistant rated shaft enclosures for grease ducts (ICC-ES ESR-1255). With its excellent insulating capabilities, low weight and thin profile, it is an ideal choice for a duct enclosure system. This non-asbestos[2] wrap installs easily due to its high flexibility and strength.

[1] In accordance with the tolerances in ASTM C892 Standard Specification for High-Temperature Fiber Blanket Thermal Insulation.
[2] Has been demonstrated to be soluble in the lungs according to EU guideline 97/69/EG, for biopersistence.

Product Features

- Two-layer wrap for grease ducts rated as a shaft alternative per ASTM E2336
- Zero clearance to combustibles throughout the entire enclosure system for congested spaces
- Butted inner layer in 2-layer Grease Duct Applications
- One-layer wrap for fire-resistive ventilation ducts per ISO 6944 Type A
- High flexibility for installation ease
- Foil encapsulated for blanket protection, less dust, and high wrap strength
- Widest range of penetration seal systems
- Available in 24 in. x 25 ft. (609.6 mm x 7.62 m) and 48 in. x 25 ft. (1219.2 mm x 7.62 m) rolls
- Blanket adhered to foil scrim

Applications	3M™ Fire Barrier Duct Wrap 615+ is an ideal fire resistive enclosure for commercial kitchen grease ducts and ventilation air ducts. It is a proven performance alternative to a 1- or 2-hour fire-resistant rated shaft enclosures for grease ducts and provides zero clearance to combustible construction throughout the entire enclosure system. 3M™ Fire Barrier Water Tight Sealant 1000 NS, 3M™ Fire Barrier Water Tight Sealant 1003 SL or 3M™ Fire Barrier Silicone Sealant 2000+ is used in combination with 3M™ Fire Barrier Duct Wrap 615+ to firestop the duct when the duct penetrates fire-rated floor or wall assemblies. 3M™ Fire Barrier Duct Wrap 615+ also provides a firestop solution where a T-rating is required for penetrations located outside wall cavities or outside fire-resistance rated shaft enclosures. **Two-layer grease duct applications:** 3M™ Fire Barrier Duct Wrap 615+ meets the criteria of ASTM E2336 Standard Test Methods for Fire Resistive Grease Duct Enclosure Systems. **Single-layer air duct applications:** 3M™ Fire Barrier Duct Wrap 615+ has passed ISO 6944-1985 Fire Resistance Tests – Ventilation Ducts. **T-rating for metallic through-penetrating items:** 3M™ Fire Barrier Duct Wrap 615+ is used in conjunction with 3M Fire Barrier sealants to achieve up to 2-hour equal F & T-ratings in ASTM E814 (UL 1479) tested through-penetrations.

3M Fire Protection Products

3M™ Fire Barrier Duct Wrap 615+

Specifications

Installation shall be in strict accordance with manufacture's written instructions, as shown on the approved shop drawings. 3M™ Fire Barrier Duct Wrap 615+ shall be a high-temperature fiber blanket thermal insulation encapsulated in a fiberglass-reinforced aluminized polyester foil. Duct Wrap density shall be nominal 6 pcf (96 kg/m3) and have a nominal 1-1/2 in. (38.1 mm) thickness. The fiber blanket shall have a continuous use limit of 1832 °F (1000 °C). The blanket thermal resistance (R-value) at ambient temperature shall be minimum $6.3\ °\mathrm{F}\ ft\frac{°\mathrm{F}\cdot ft^2\cdot hr}{Btu}$. Smoke Developed Index and Flame Spread Index of the bare blanket, and of the foil encapsulated blanket shall be 0/0. The foil encapsulation shall be bonded to the core blanket material.

Typically Specified Division or Section
Division 7 – Thermal and Moisture Protection
Section 23 07 13 – Duct Insulation
Related Sections
Section 07 21 00 – Thermal Protection
Section 07 21 16 – Blanket Insulation
Section 07 84 00 – Firestopping
Section 23 00 00 – Heating, Ventilation and Air-Conditioning (HVAC)
Section 23 31 13 – Metal Ducts

3M™ Fire Barrier Duct Wrap 615+ has been tested in accordance with the following: ICC-ES AC101, ASTM E2336, ASTM E119, ASTM E814, ASTM E84, ASTM E136, ASTM C518, ISO 6944-85.

3M™ Fire Barrier Duct Wrap 615+, when installed per ASTM E2336 tested Grease Duct Design Listings, meets the following code requirements for field-applied grease duct enclosures:
NFPA 96
International Mechanical Code®
Uniform Mechanical Code

3M Fire Protection Products

3M™ Fire Barrier Duct Wrap 615+

Performance and Typical Physical Properties

Scrim Color	Aluminum with Black Text		
Blanket Color	White		
Blanket Weight	0.9 lbs./ft^2 (4.38 kg/m^2)		
Surface Burning Characteristics (ASTM E84)	**Foil Encapsulated Blanket:** Flame Spread Index: 0 Smoke Developed Value: 0		
Thermal Conductivity	Temperature	$\frac{Btu \cdot in}{hr \cdot ft^2 \cdot °F}$	$\frac{W}{m \cdot K}$
	500°F (260°C)	0.60	0.09
	1000°F (537°C)	1.15	0.17
	1500°F (815°C)	1.93	0.28
	1800°F (982°C)	2.51	0.36
	2000°F (1093°C)	2.94	0.43
Linear Shrinkage 24 Hour @ 2012°F (1100°C)	1.2%		
Noise Reduction Coefficient – NRC (ASTM C423)	0.80		
Mold and Mildew Resistance (ASTM C1338)	Devoid of growth		
Duct Service Temperature (ASTM C411)	Maximum Operating Temperature: 250°F (121°C)[3]		

[3] For ducts that operate with a surface temperature exceeding 250°F, contact your local 3M representative for further installation considerations.

Installation Techniques

Consult a 3M Authorized Fire Protection Products Distributor Sales Representative for applicable UL, ULC, Intertek or other third-party drawings and system details.

Installation Details: Tested and listed system details must be followed for each specific application. System examples are listed below:

Grease Duct Listings – ASTM E2336 / ICC-ES AC101

Fire Resistive Rating	Enclosure System	Third-Party Testing Services Design Listing	Description
1 and 2 hour	2 Layers of 3M™ Fire Barrier Duct Wrap 615+	ICC-ES ESR-1255 Intertek 3MU/FRD 120-18 Intertek 3MU/FRD 120-19	Rectangular Rectangular Round

Ventilation Duct Listings – ISO 6944 Type A

Fire Resistive Rating	Enclosure System	Third-Party Testing Services Design Listing	Description
1 and 2 hour	1 Layer of 3M™ Fire Barrier Duct Wrap 615+	Intertek 3MU/DI 60-01 UL HNLJ.V-27 Intertek 3MU/DI 120-01	Rect. & Round (1 hour) Rectangular (2 Hour) Rect. & Round (2 Hour)

Through Penetration T-Ratings – ASTM E814 (UL 1479)

Protected Item	UL System	F & T Rating
Floor Sink	F-A-1160	2 Hour
Metal Pipe	F-A-1057	2 Hour

Maintenance

No maintenance is expected when installed in accordance with the applicable Intertek, UL or other third-party listed system and in accordance with
3M™ Fire Barrier Duct Wrap 615+ Installation Guidelines. Once installed, if any section of the 3M™ Fire Barrier Duct Wrap 615+ is damaged such
that the blanket requires repair, the following procedure will apply:

1. If the blanket has not been damaged but the foil has ripped, seal the rips with aluminum foil tape.
2. If the blanket has been damaged:

a. The damaged section should be removed by cutting the steel banding or removing the clips holding it in place.
b. A new section of the same dimension should be cut from a roll of 3M™ Fire Barrier Duct Wrap 615+, either 24" (60.9cm) or 48" (121cm) wide.
c. The new section should be placed and fitted ensuring the same overlap that existed previously (i.e. the original installation method).
d. The steel banding should be placed around the material and tensioned so as to sufficiently hold the 3M™ Fire Barrier Duct Wrap 615+ in place.

Storage and Shelf Life	3M™ Fire Barrier Duct Wrap 615+ rolls are stable under normal storage conditions. Normal stock and stock rotation practices are recommended. 3M™ Fire Barrier Duct Wrap 615+ shelf life is indefinite when stored in original unopened packaging in a dry warehouse environment. Pallets should not be stacked. Lot numbering (e.g. 1807200223): First two digits = last two digits of the year manufactured (2018=18), third and fourth digit = month of manufacture, fifth and sixth digits = is the day of manufacture, seventh and eighth digits = crew code from fiber blanket, last two digits = day of encapsulation.
Availability	Available from 3M Authorized Fire Protection Products Distributors. For additional technical and purchasing information, call 1-800-328-1687 or visit 3M.com/firestop.
Safe Handling	Consult Safety Data Sheet prior to handling and disposing of 3M™ Fire Barrier Duct Wrap 615+.
Technical Information	The technical information, recommendations and other statements contained in this document are based upon tests or experience that 3M believes are reliable, but the accuracy or completeness of such information is not guaranteed.
Product Use	Many factors beyond 3M's control and uniquely within user's knowledge and control can affect the use and performance of a 3M product in a particular application. Given the variety of factors that can affect the use and performance of a 3M product, user is solely responsible for evaluating the 3M product and determining whether it is fit for a particular purpose and suitable for user's method of application.
Warranty, Limited Remedy and Disclaimer	Unless an additional warranty is specifically stated on the applicable 3M product packaging or product literature, 3M warrants that each 3M product meets the applicable 3M product specification at the time 3M ships the product. 3M MAKES NO OTHER WARRANTIES OR CONDITIONS, EXPRESS OR IMPLIED, INCLUDING, BUT NOT LIMITED TO, ANY IMPLIED WARRANTY OR CONDITION OF MERCHANTABILITY OR FITNESS FOR A PARTICULAR PURPOSE OR ANY IMPLIED WARRANTY OR CONDITION ARISING OUT OF A COURSE OF DEALING, CUSTOM OR USAGE OF TRADE. If the 3M product does not conform to this warranty, then the sole and exclusive remedy is, at 3M's option, replacement of the 3M product or refund of the purchase price.

3M

Industrial Adhesives and Tapes Division
3M Center, Building 225-3S-06
St. Paul, MN 55144-1000

Phone 800-328-1687
Fax 877-369-2923
Web 3M.com/firestop

3M and 3M Science. Applied to Life. are trademarks of 3M Company
© 3M 2021. All rights reserved.